KEY FEATURES

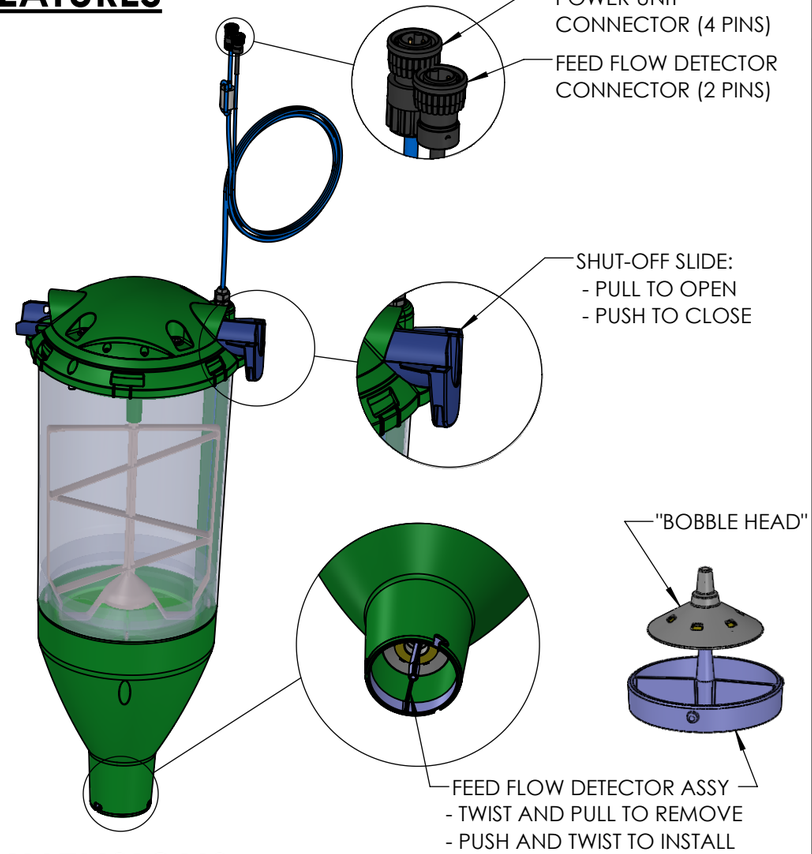

KEY DIMENSIONS

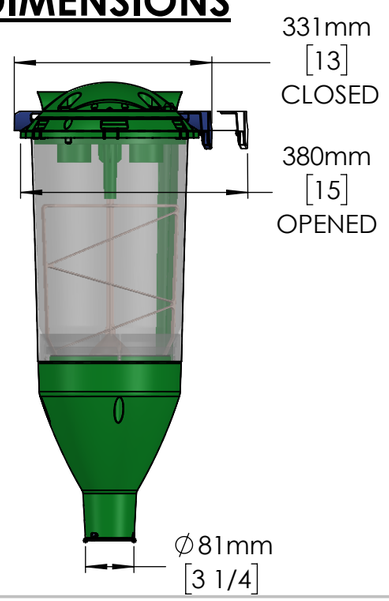

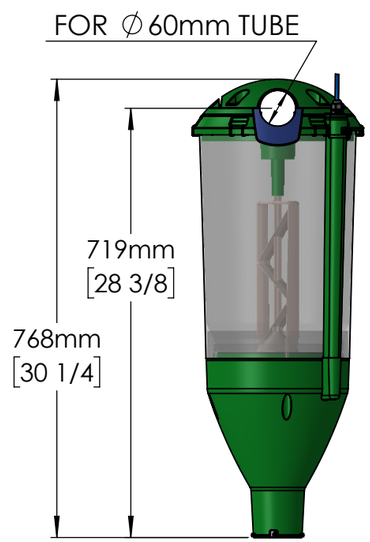

INSTALLATION PROCEDURE

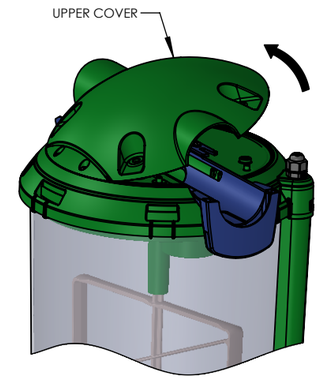

STEP 1: FULLY OPEN THE UPPER COVER

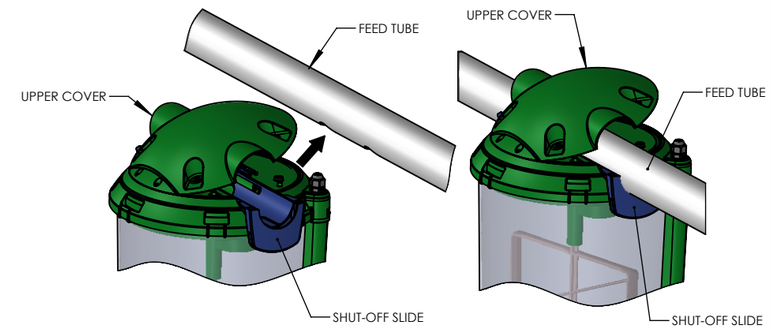

STEP 2: INSTALL THE BOTTLE AROUND THE FEED TUBE AND ENSURE THE TUBE IS PROPERLY SEATED ON THE SHUT-OFF SLIDE

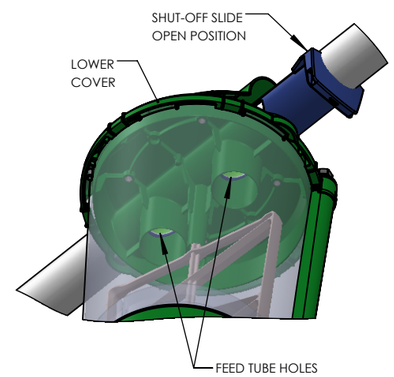

STEP 3: IF REQUIRED, ADJUST THE BOTTLE POSITION ON THE TUBE UNTIL THE HOLES IN THE TUBE ARE ALIGNED WITH THOSE IN THE LOWER COVER.

IMPORTANT:

- ***FEED TUBE OUTLET HOLES SIZE SHALL BE Ø50 mm [2 in] MAX***
- ***THEIR CENTRE-TO-CENTRE DISTANCE SHALL BE 241 mm [4 3/4 in]***

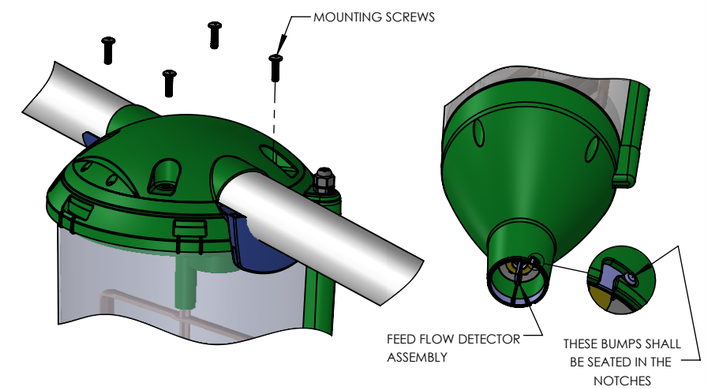

STEP 4: CLOSE THE UPPER COVER AND INSTALL THE 4 SCREWS PROVIDED WITH THE BOTTLE.

- ***ENSURE THAT THE SHUT-OFF SLIDE IS STILL FREE TO MOVE TO CLOSE AND OPEN THE FEED TUBE OUTLET HOLES.***
- ***CHECK IF THE BOTTLE IS PROPERLY SECURE AND CANNOT SLIDE OR ROTATE BY ITSELF ON THE TUBE***
- ***CHECK IF THE FLOW DETECTOR IS STILL CORRECTLY SEATED AND THE BOBBLE HEAD IS POINTING UPWARDS.***

SPECIAL RECOMMANDATIONS

- IN ORDER TO AVOID EXCESSIVE BENDING AND WARPING OF THE FEED TUBE, IT IS RECOMMANDED TO SUPPORT THE FEED TUBE ON BOTH SIDES OF THE BOTTLE AT A DISTANCE THAT SHOULD NOT EXCEED 2ft (600mm) FROM THE SHUT-OFF ENDS .
- IF PRESSURE WASHING IS USED FOR CLEANING, DO NOT AIM DIRECTLY AT THE FEED FLOW DETECTOR ASSEMBLY OR CABLE CONNECTORS. REMOVE THE FEED FLOW DETECTOR BEFOREHAND.
- TO PREVENT EXCESSIVE BUILD-UP OF FEED OVER THE LIP OF THE FLOW DETECTOR, IT IS SUGGESTED TO REMOVE IT AND CLEAN IT AT LEAST TWICE A YEAR.
- **DO NOT FORGET TO CALIBRATE (EMPTY AND FULL) EACH FEED BOTTLE PRIOR TO USE FOR PRODUCTION.**

Propriétaire

ZAXE Technologies Inc

Confidentialité et politiques

Ce document est la propriété ZAXE TECHNOLOGIES et ne peut être utilisé pour d'autres fins que celles pour lesquelles il a été préparé et soumis. Aucune reproduction ne peut être faite sans autorisation.

The information contained in this drawing is the sole property of zaxe technologies. Any reproduction in part or as a whole without the written permission is prohibited.

©2019 Tous les droits reservées /All rights reserved.

No. de produit / Product Part Number:
450-00065

Designation du produit / Product Name
3P ESF BOTTLE

Titre du dessin / Drawing Title
INSTALLATION GUIDE EN.

Révision / Revision: **A**

Feuille / Sheet: **1 / 1**

Format: **Tabloid 11"/17"**

Echelle / Scale : **N/A**

Matériau / Material specifications:
N/A

Unités / Units:
mm[in]

Standard Tolerances:

Inches
X/X ± 1/16"
X.XX" ±0.03"
X.XXX" ±0.010"

Millimeters
X.X ± 0.8
X.XX ±0.25

Angle
X.X° ± 0.5°

Dernière mise à jour / Last update date:
2019-07-09

Dessiné par / Drawn by:
LJ

Approuvé par /Approved by:

Historique de révision / Revision history:

REV.	DESCRIPTION
A	INITIAL RELEASE
B	NOTE FOR CALIBRATION ADDED
-	-
-	-
-	-

NEW 3P MOTORS CONVERSION CABLE INSTALLATION PROCEDURE

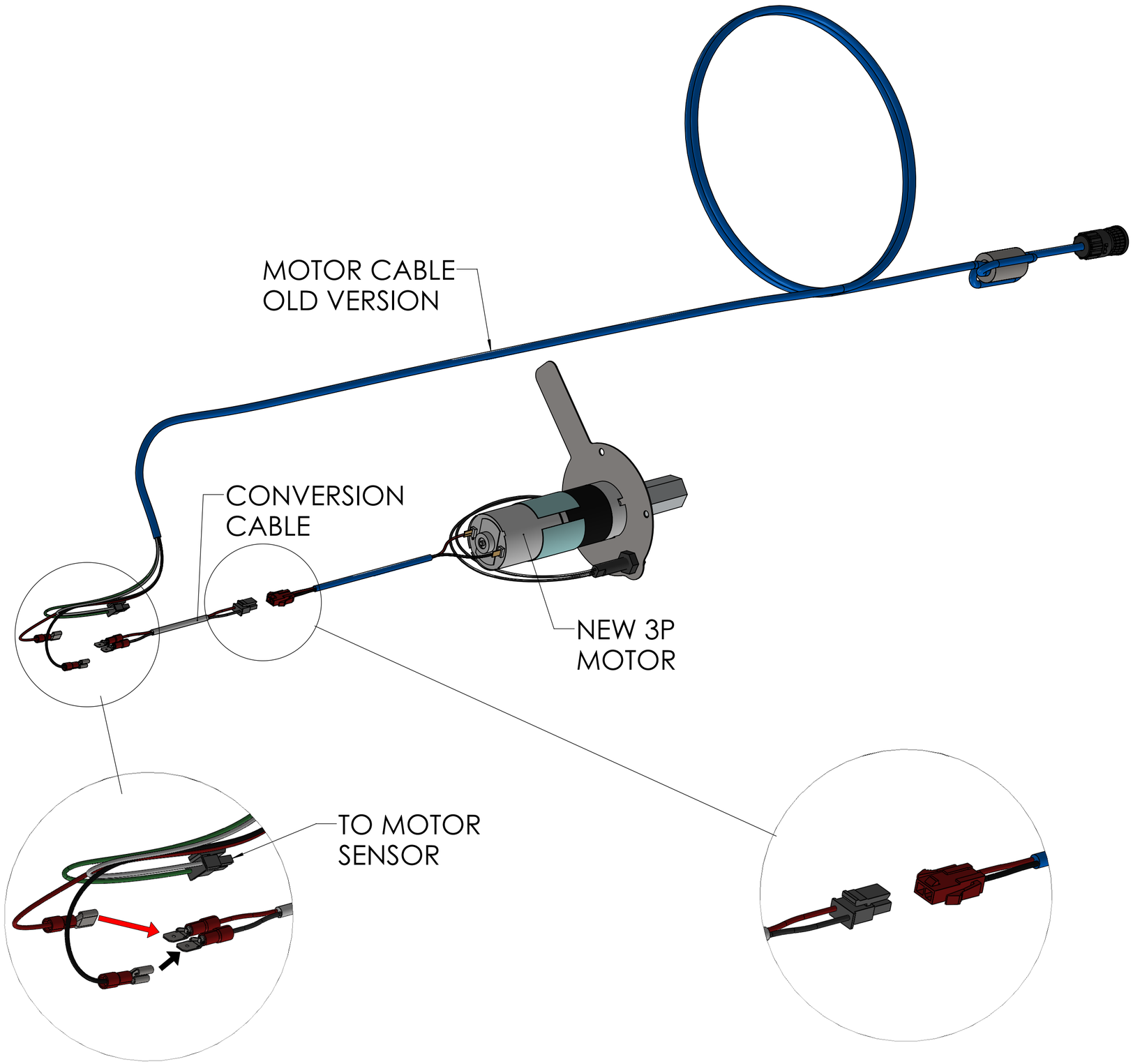

STEP 1 : CONNECT THE OLD VERSION MOTOR CABLE TO THE CONVERSION CABLE :

- **BLACK TO BLACK**
- **RED TO RED**

STEP 2 : CONNECT THE CONVERSION CABLE TO THE NEW 3P MOTOR ASSEMBLY

Propriétaire

ZAXE Technologies Inc

Confidentialité et politiques

Ce document est la propriété ZAXE TECHNOLOGIES et ne peut être utilisé pour d'autres fins que celles pour lesquelles il a été préparé et soumis. Aucune reproduction ne peut être faite sans autorisation.

The information contained in this drawing is the sole property of zaxe technologies. Any reproduction in part or as a whole without the written permission is prohibited.

©2021 Tous les droits reservées /All rights reserved.

No. de produit / Product Part Number:
450-00065

Designation du produit / Product Name
3P ESF BOTTLE

Titre du dessin / Drawing Title
REPAIR GUIDE

Révision / Revision	Feuille / Sheet:
A	**1 / 1**

Matériau / Material specifications:
N/A

Unités / Units:
mm[in]

Standard Tolerances:

Inches
X/X ± 1/16"
X.XX" ±0.03"
X.XXX" ±0.010"

Millimeters
X.X ± 0.8
X.XX ±0.25

Angle
X.X° ± 0.5°

Dernière mise à jour / Last update date:
2021-02-16

Dessiné par / Drawn by:
LJ

Approuvé par /Approved by:

Historique de révision / Revision history:

REV.	DESCRIPTION
A	INITIAL RELEASE